Overview of Pile Foundation Design & Construction

Chapt. 2 & 3

A Quick Item of Interest – Foundations

- MnDOT-funded survey to State DOT's
- 41 out of 50 States eventually responded (with some prodding!)
- One of several questions – How much do states use driven piles, vs. drilled shafts, vs. shallow foundations for transportation applications?
- Of those 41 respondents, the following results were obtained…

(Full report available online through MnDOT)

Results of the State DOT Setup Survey

1 – For transportation applications in your state, which of the following best describes the use of Driven Piles:

0	0%	Our agency never uses Driven Piles for transportation applications
1	2%	Our agency rarely uses Driven Piles for transportation applications
2	5%	Our agency occasionally uses Driven Piles for transportation applications
34	83%	Our agency often uses Driven Piles for transportation applications
4	10%	Our agency almost exclusively uses Driven Piles for transportation applications

Results of the State DOT Setup Survey

2 – For transportation applications in your state, which of the following best describes the use of Drilled Shafts:

0	0%	Our agency never uses Drilled Shafts for transportation applications
3	7%	Our agency rarely uses Drilled Shafts for transportation applications
22	54%	Our agency occasionally uses Drilled Shafts for transportation applications
16	39%	Our agency often uses Drilled Shafts for transportation applications
0	0%	Our agency almost exclusively uses Drilled Shafts for transportation applications

Results of the State DOT Setup Survey

3 – For transportation applications in your state, which of the following best describes the use of Shallow Foundations:

0	0%	Our agency never uses Shallow Foundations for transportation applications
8	20%	Our agency rarely uses Shallow Foundations for transportation applications
17	41%	Our agency occasionally uses Shallow Foundations for transportation applications
16	39%	Our agency often uses Shallow Foundations for transportation applications
0	0%	Our agency almost exclusively uses Shallow Foundations for transportation applications

Design Considerations

- Insertion of piles generally alters soil character, and intense stresses are set up near piles
- Complex soil-pile interaction

Therefore, it is necessary to use practical, semi-empirical design methods

Solution Requires Thorough Information & Understanding of:

1. Foundation loads
2. Subsurface conditions & soil/rock properties
3. Current practices in pile design & construction

Strength Considerations
Two Failure Modes

1. Pile structural failure
   - controlled by allowable stresses

2. Soil (geotechnical) failure
   - controlled by factor of safety

In addition, the ability to drive the pile, evaluated by wave equation

Serviceability Considerations

- Factors arising from the action of service loads
  - i.e., Settlement

Foundation Design Process

(1 of 3)

1. Establish Requirements for Structural Conditions and Site Characterization
2. Obtain General Site Geology
3. Collect Foundation Experience From Area to Identify Possible Foundation Types
4. Determine Preliminary Substructure Loads and Load Combinations at Foundation Level
5. Develop and Execute Subsurface Exploration and Laboratory Testing Program
6. Evaluate Information and Determine Foundation Systems for Further Evaluation
7. Deep Foundations
8. Select Candidate Driven Pile Foundations Types and Sections For Further Evaluation

Shallow Foundations
- w/o Ground Improvement
- with Ground Improvement

Evaluate Other Deep Foundation Systems

Design Not Discussed Herein

Continued on Next Page

Foundation Design Process

(2 of 3)

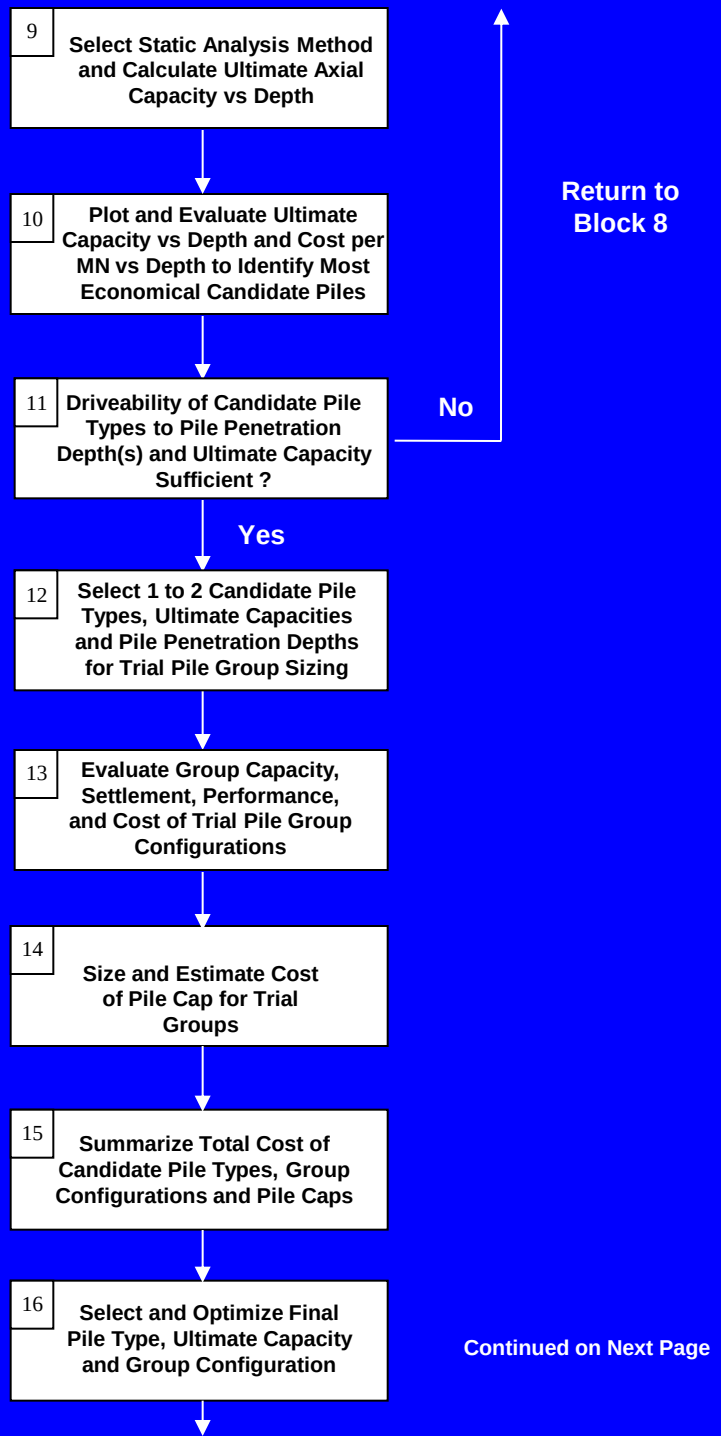

Continued on Next Page

Foundation Design Process

(3 of 3)

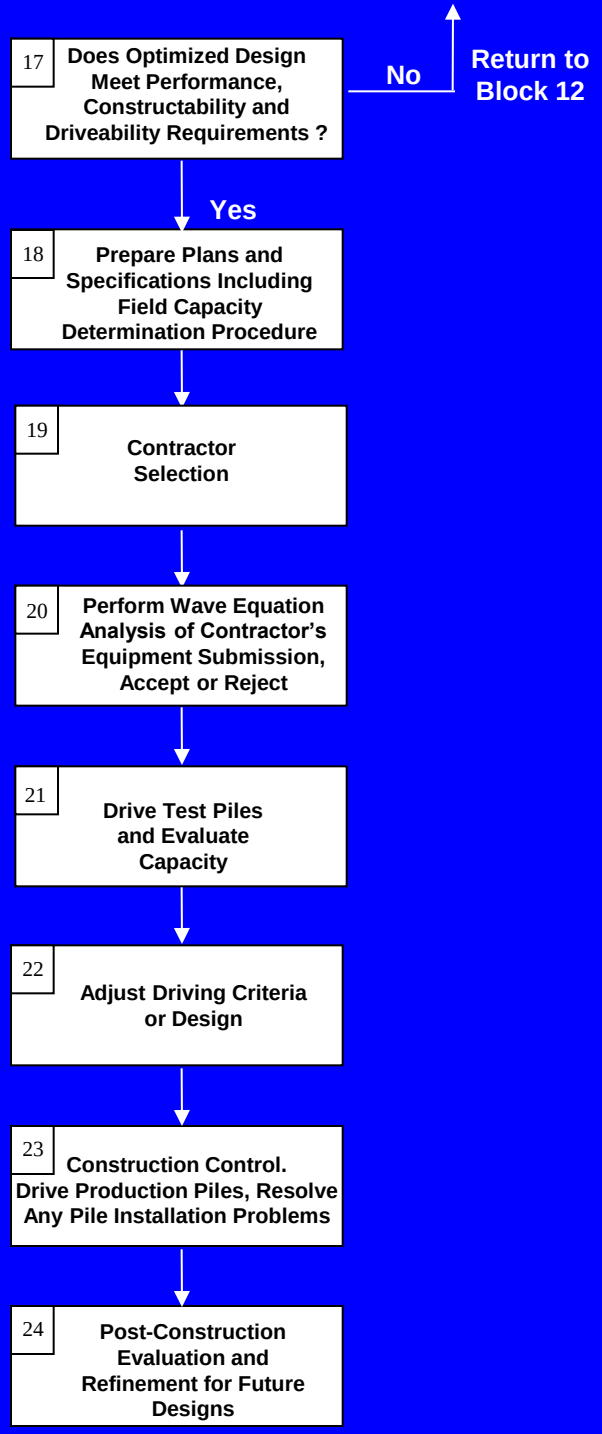

Foundation Design Process (condensed)

Design Phase

Collect and Evaluate Design Information

↓

Perform Pile Design Including Driveability

↓

Prepare Specifications and Select Contractor

↓

Construction Phase

Evaluate Equipment

↓

Verify Capacity

↓

Drive Production Piles

Types of Lab Tests

- Soil classification & index
- Shear strength
- Consolidation
- Electro chemical classification

PEACH FREEWAY SUBSURFACE PROFILE

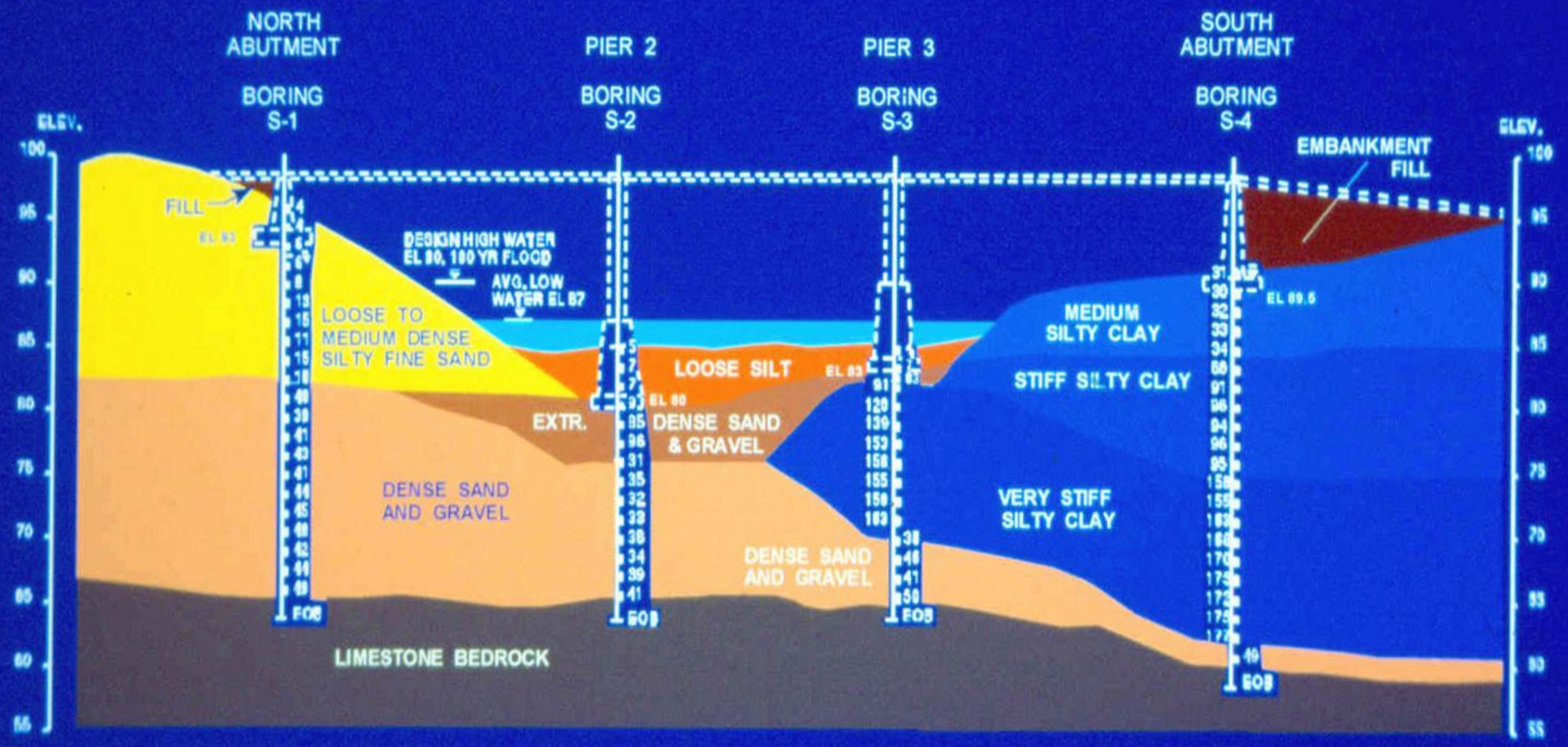

ESTABLISHMENT OF A NEED FOR PILE FOUNDATION

SITUATIONS WHERE A DEEP FOUNDATION IS NEEDED

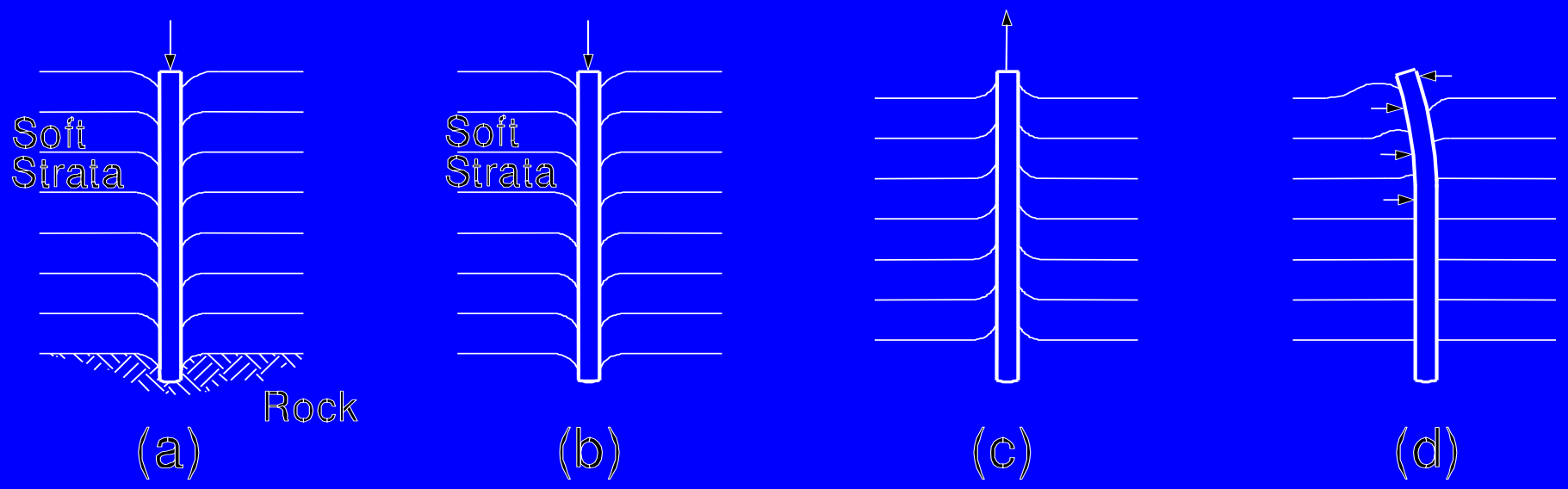

SITUATIONS WHERE A DEEP FOUNDATION IS NEEDED

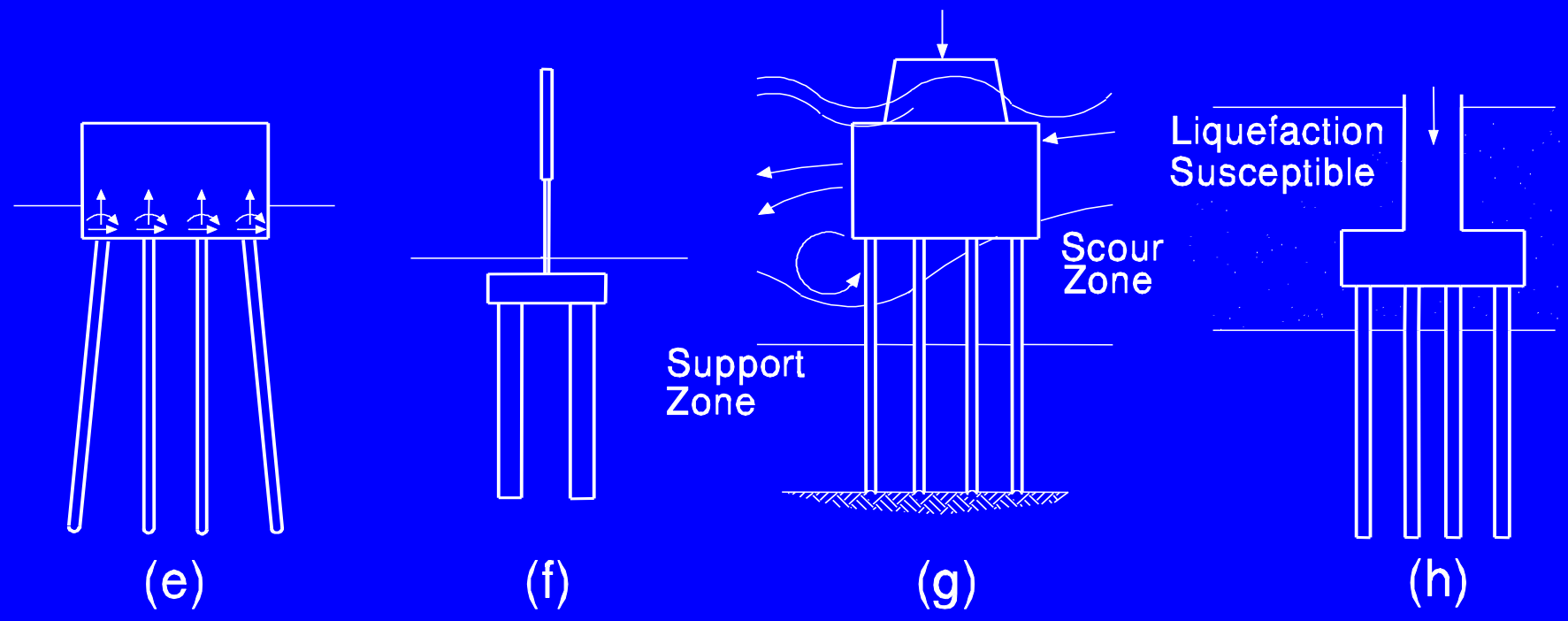

SITUATIONS WHERE A DEEP FOUNDATION IS NEEDED

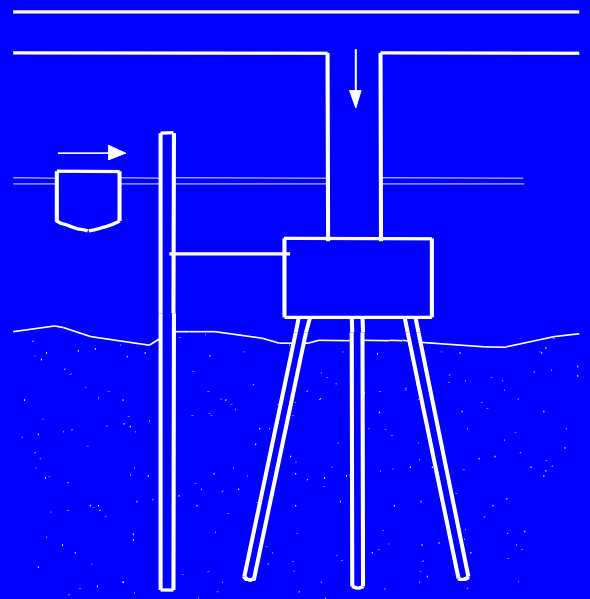

(i)

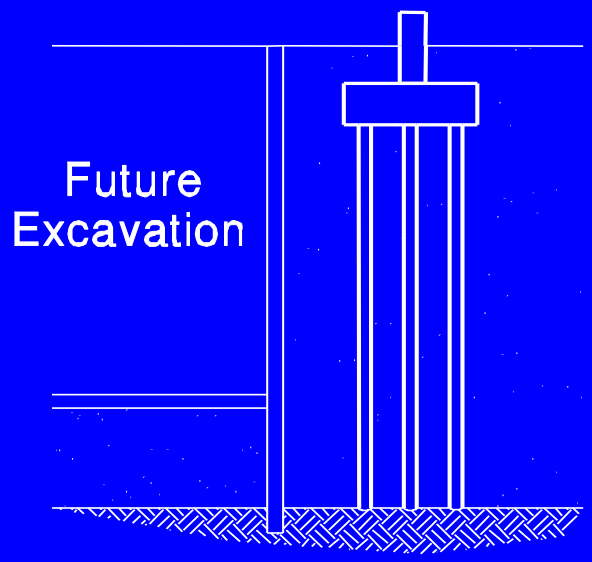

(j)

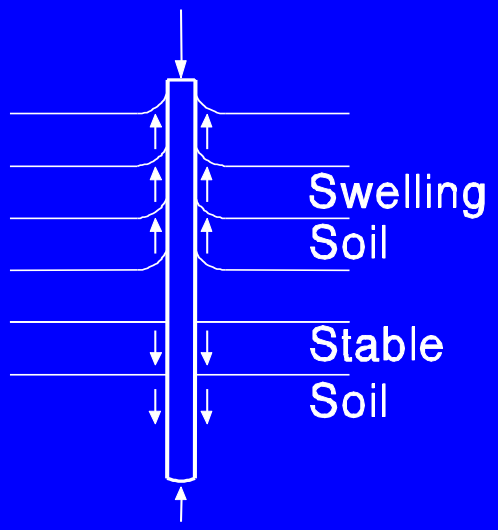

(k)

SELECTION OF PILE TYPE AND SIZE FOR FURTHER STUDY

STATIC ANALYSIS METHODS

Static analysis methods and computer solutions are used to:

- Calculate pile length for loads
- Determine number of piles
- Determine most cost-effective pile type ($ / ton)
- Calculate foundation settlement
- Calculate performance under uplift & lateral loads

STATIC ANALYSIS METHODS

Static analysis methods and computer solutions are an integral part of the design process.

Static analysis methods are necessary to determine the most cost-effective pile type.

For a given pile type:

- calculate capacity
- determine pile length
- determine number of piles

Bid Quantity

EXAMPLE SOIL PROFILE

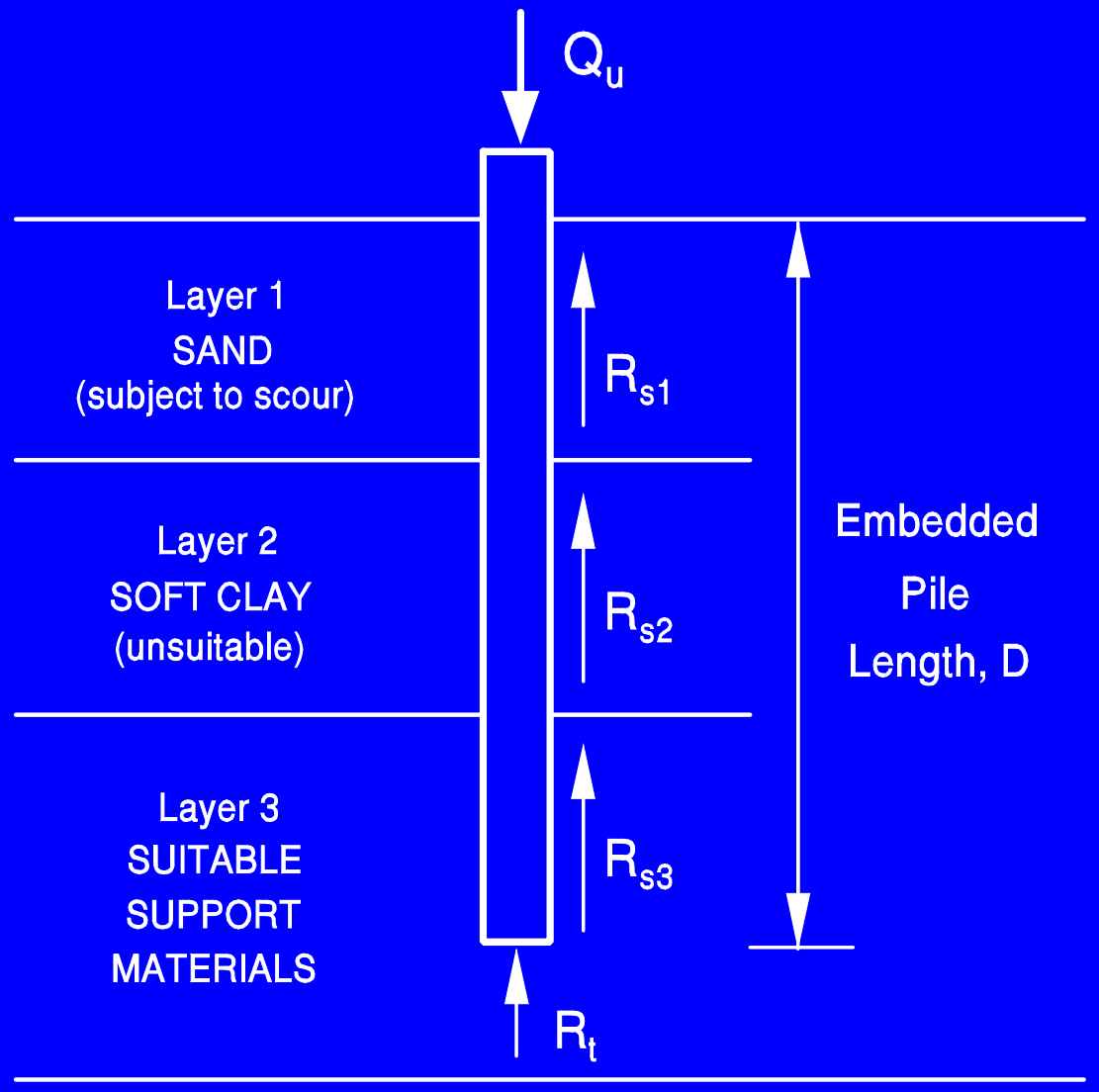

FACTOR OF SAFETY

The Commonly Referenced Factor of Safety Relates To Slip Of The Pile Relative To The Soil Without Structural Failure In The Pile

FACTOR OF SAFETY, ASD

The factor of safety used in a static analysis should be based on the construction control method specified.

Construction Control Method	Factor of Safety
Static load test with wave equation analysis	2.00
Dynamic testing with wave equation analysis	2.25
Indicator piles with wave equation analysis	2.50
Wave equation analysis	2.75
Gates dynamic formula	3.50

Stress Zones from a Single Pile and Pile Group

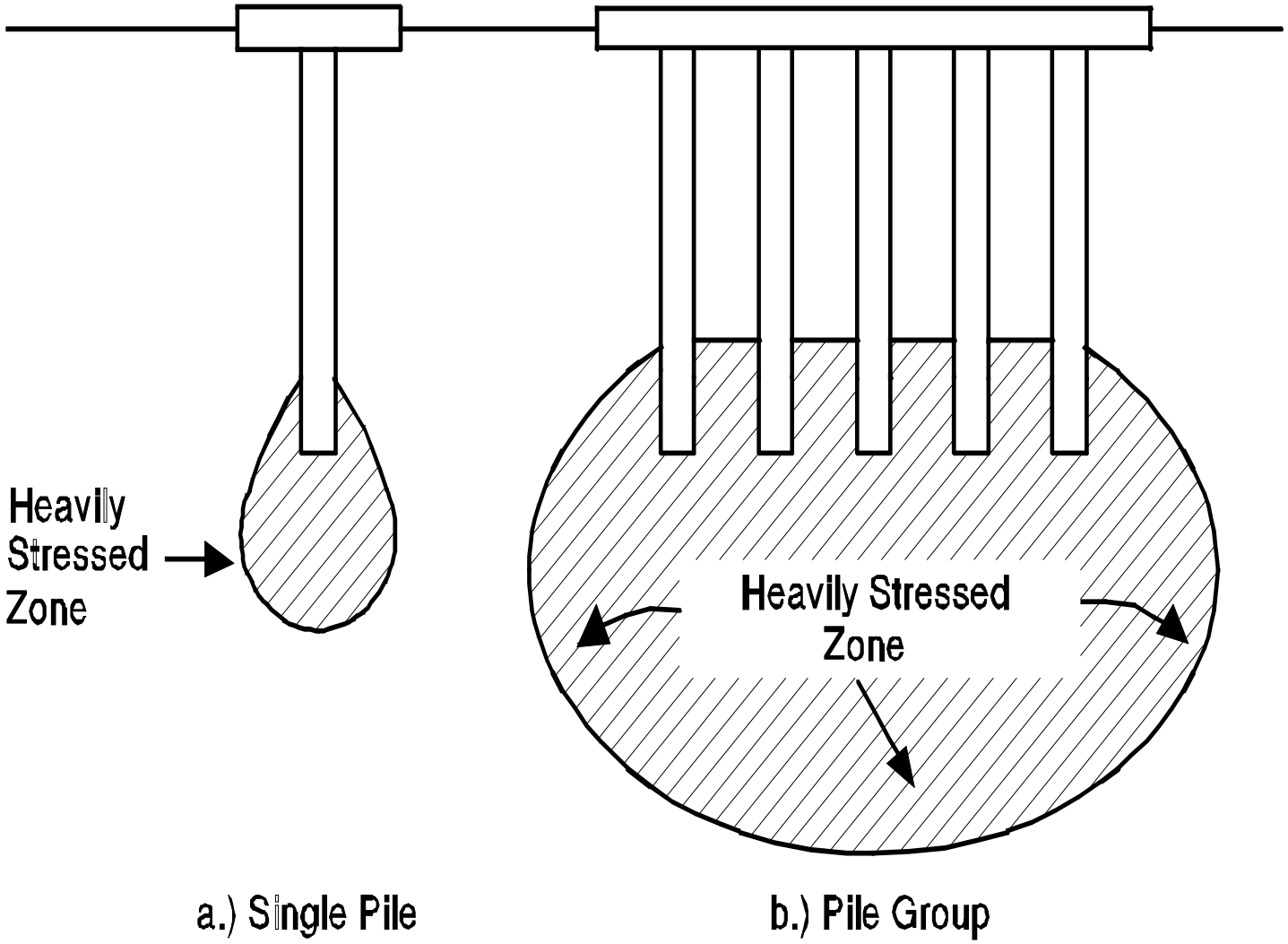

Special Design Considerations

- Negative Shaft Resistance or Downdrag
- Lateral Squeeze
- Scour
- Soil and Pile Heave
- Seismic Considerations

Additional Design Considerations

- Time effects on pile capacity
- Effects of predrilling, jetting, and vibratory hammer use on capacity
- Effects of site dewatering on pile capacity
- Densification effects on pile capacity
- Plugging of open pile sections
- Pile-driving-induced vibrations and noise
- Pile driveability

PILE DRIVEABILITY

Pile driveability should be checked during the **design stage** for all driven piles.

Pile driveability is particularly critical for closed-end pipe piles.

PILE DRIVEABILITY EVALUATION DURING DESIGN STAGE

1. Wave Equation Analysis

Computer analysis that does not require a pile to be driven.

2. Dynamic Testing and Analysis

Requires a pile to be driven and dynamically tested.

3. Static Load Tests

Requires a pile to be driven and statically load tested.

Parts of a Foundation Report

- Table of contents
- Introduction
- Scope of explorations
- Interpretation of subsurface conditions
- Design soil parameters
- Design analysis
- Geotechnical conclusions & recommendations
- Construction considerations
- Appendices & graphical presentations

Project Plans

- Location of piles
- Designation to identify piles
- Pile cutoff elevation
- Est. pile toe elevation
- Min. pile toe elevation
- Required pile batter & direction
- Orientation of H-Piles
- Ultimate pile capacity
- Location of soil borings
- Results of subsurface exploration

Pile Specs – Major Sections

- Pile material
- Driving system
- Pile installation
- Method of determining capacity
- Method of measurement (payment)

$$$$$$$$$$$$

Construction Considerations

- Success depends largely on relating static analysis results to dynamic methods of field installations
- Pile must be driven to a resistance, or predetermined length
- Avoid pile damage by excessive driving

Construction Considerations (cont.)

- Knowledge supervision & inspection is <u>KEY</u> to proper installation
- Post construction review of driving results vs. predictions of blow count, pile lengths, field problems, etc. is essential

Construction Phase

Contractor Selection

↓

Perform Wave Equation Analysis of Contractor's Equipment Submission, Accept or Reject

↓

Drive Test Piles and Evaluate Capacity

↓

Adjust Driving Criteria or Design

↓

Construction Control. Drive Production Piles, Resolve Any Pile Installation Problems

↓

Post-Construction Evaluation and Refinement for Future Designs

Dynamic Soil Resistance =

Static Resistance + Damping Force

Static Resistance Component is the Capacity Developed by the Pile to Resist Static Loads

Both Components Must be Considered in a Drivability Analysis

Dynamic Formula or Wave Equation

Dynamic Test

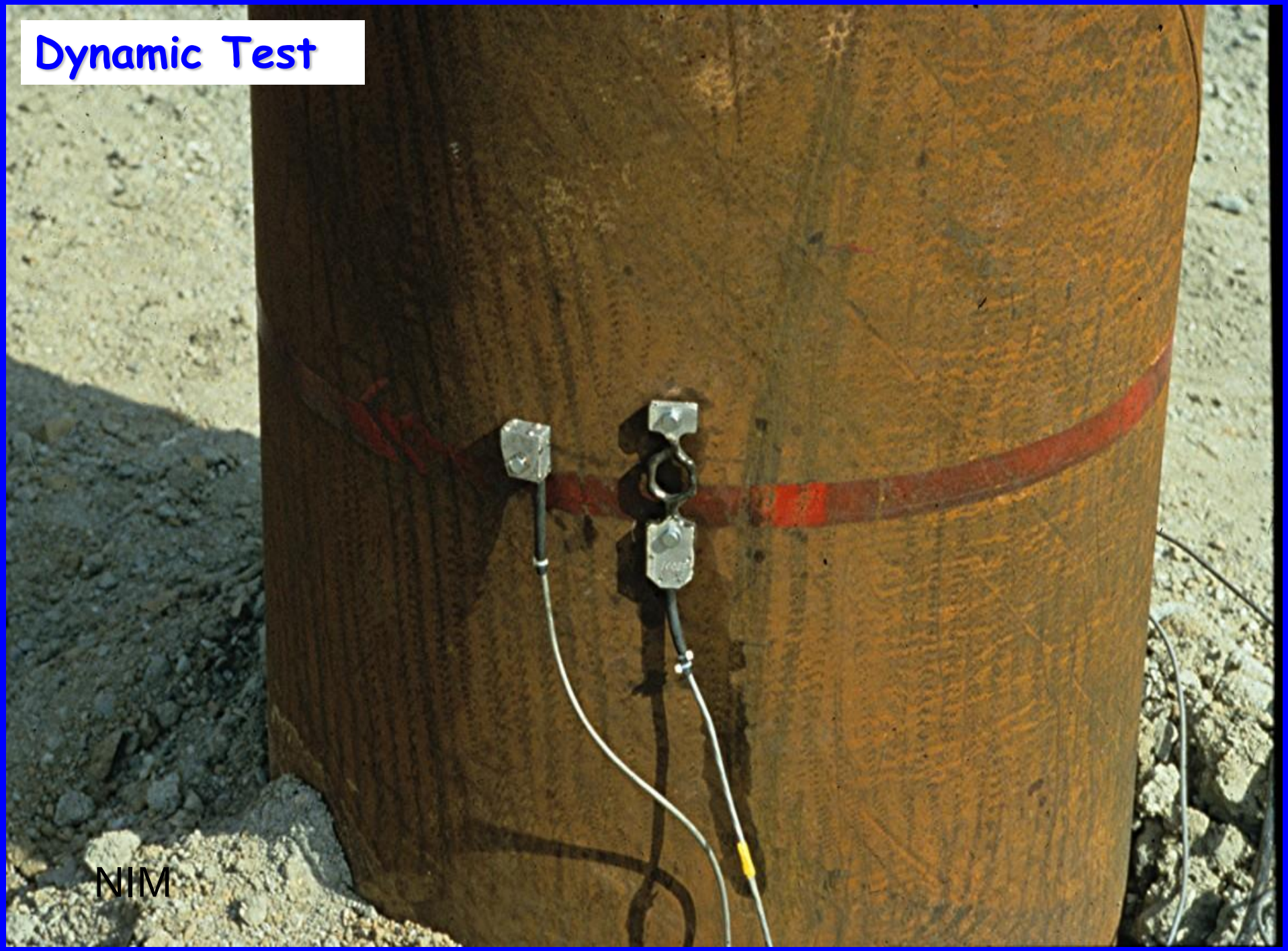

NIM

Static Load Test


O-cell
35


Statnamic

Inspection of Pile Installations

STATE PROJECT NO.: _____ DATE: _____

JOB LOCATION: _____ BENT / PIER NO.: _____ PILE NO.: _____

PILE TYPE: _____ LENGTH: _____ COATING: _____ ULTIMATE CAPACITY: _____

HAMMER: _____ RATED ENERGY: _____ OPERATING RATE: _____ HELMET WEIGHT: ___

HAMMER CUSHION TYPE: _____ t = _____ PILE CUSHION TYPE: _____ t = _____

REF. ELEV.: _____ MIN TOE ELEV.: _____ FINAL TOE ELEV.: _____ PILE CUTOFF ELEV.: _____

WEATHER: _____ TEMP.: _____ START TIME: _____ STOP TIME: _____

FEET	BLOWS	STROKE / PRESSURE	REMARKS	FEET	BLOWS	STROKE / PRESSURE	REMARKS
0 – 1				35 – 36			
1 – 2				36 – 37			
2 – 3				37 – 38			
3 – 4				38 – 39			
4 – 5				39 – 40			
5 – 6				40 – 41			
6 – 7				41 – 42			
7 – 8				42 – 43			
8 – 9				43 – 44			
9 – 10				44 – 45			
10 – 11				45 – 46			
11 – 12				46 – 47			
12 – 13				47 – 48			
13 – 14				48 – 49			
14 – 15				49 – 50			
15 – 16				50 – 51			
16 – 17				51 – 52			
17 – 18				52 – 53			
18 – 19				53 – 54			
19 – 20				54 – 55			
20 – 21				55 – 56			
21 – 22				56 – 57			
22 – 23				57 – 58			
23 – 24				58 – 59			
24 – 25				59 – 60			
25 – 26				60 – 61			
26 – 27				61 – 62			
27 – 28				62 – 63			
28 – 29				63 – 64			
29 – 30				64 – 65			
30 – 31				65 – 66			
31 – 32				66 – 67			
32 – 33				67 – 68			
33 – 34				68 – 69			
34 – 35				69 – 70			

PILE SUPPLIER: _____ PILE CAST OR ROLLING DATE: _____

PILE TOE ATTACHMENTS: _____ FINAL PILE HEAD CONDITION: _____

FINAL ALIGNMENT: _____ FINAL PLUMBNESS: _____ INTERNAL INSPECTION: _____

INSPECTORS NAME AND SIGNATURE: _____

Communication

Proper construction control requires effective communication between the Design and Field Engineers.

Variations of pile items from plans & specs should be discussed with the Designer.

Feedback of construction monitoring data to the Design Engineer is necessary.

CONSTRUCTION-STAGE COMMUNICATION

Subject	Structural	Geotechnical	Construction
Establish Appropriate Methods of Construction Control and Quality Assurance.	——X——	——X——	——X ——
Perform Wave Equation Analysis of Contractors Driving System to Establish Driving Criteria.	——X——	——X——	——X ——
Perform Static Load Test(s) and/or Dynamic Monitoring and Adjust Driving Criteria.	——X——	——X——	——X ——
Resolve Pile Installation Problems / Construction Issues.	——X——	——X——	——X ——

THE END